HIGH-SCHOOLCANSAT MODEL FOR ADVANCEMENT OF AGRICULTURAL PROCESS IN THAILAND

21st June 2019

Dr. Peeramed Chodkaveekityada &
Agricultural Exploration Assistant Satellite Team

SPONSORED BY AIRASIA THAILAND

CONTENTS

Introduction
Objectives & Missions

Chayakorn Vongbunsin

SPONSORED BY AIRASIA THAILAND

INTRODUCTION

BACKGROUNDS & PROBLEMS

1. **Data Accessibility Problems**
2. **Growth Deficiency of Crops**
3. **Most farmers' incomes are below poverty line of Thailand**

INTRODUCTION

6 THAI ECONOMIC CROPS

Rice

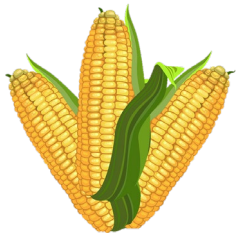

Maize

Palm

Rubber Tree

Cassava

Sugarcane

SPONSORED BY AIRASIA THAILAND

OBJECITVES & MISSIONS

1

To collect atmospheric physical data: *temperature, humidity, carbon dioxide intensity, average annual rainfall, red and blue light intensity* from atmosphere and databases. Use data to decide which crop is the most suitable to be grown in the area.

2

To use the following parameters to visualize the suitable area by using spatial analysis method.

Plant Growth Environmental Factors

Vivatsathorn Thitasirivit

SPONSORED BY AIRASIA THAILAND

ENVIRONMENTAL FACTORS

1 *LIGHT*

Plants need sufficient light source to help the photosynthetic process in order to grow into crops.

Wavelength ranges of light source which are required for plant growth range from ***430 – 453 nm*** *(blue light) and* ***642 – 662 nm*** *(red light) for Chlorophyll A and B.*

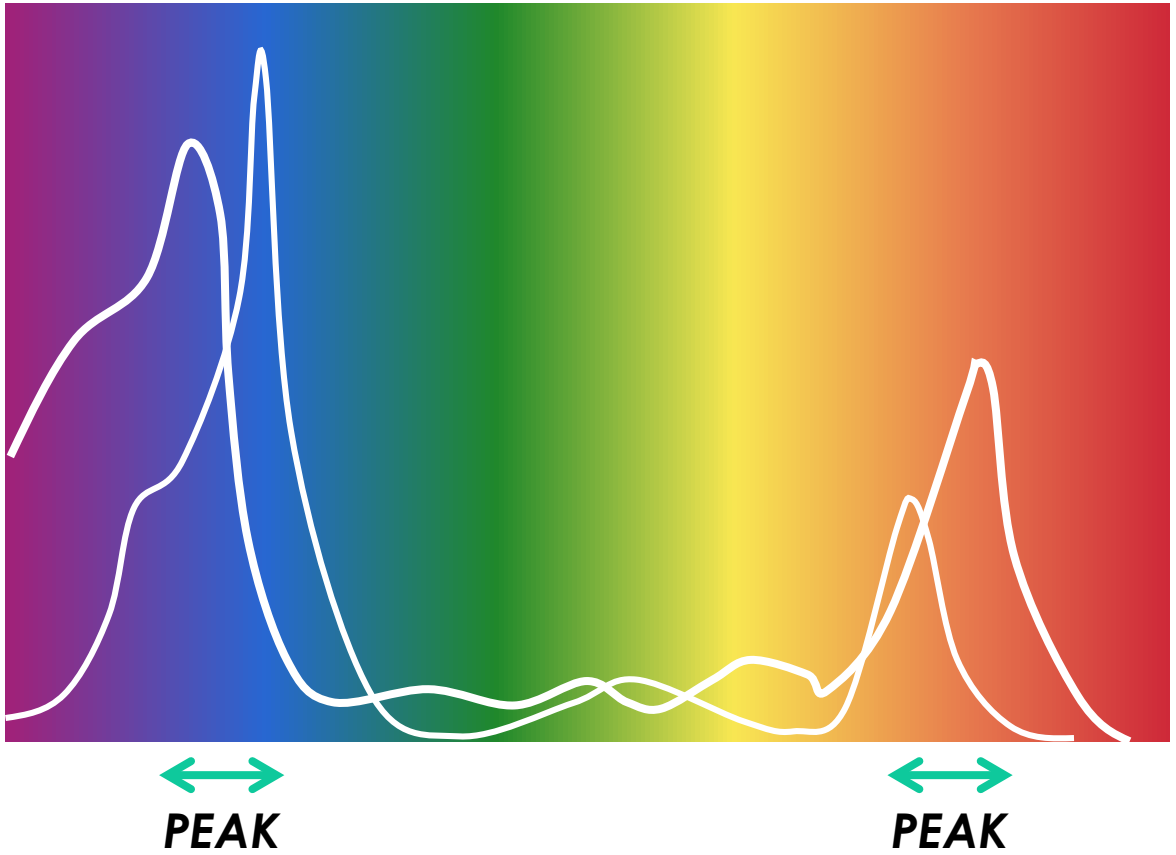

ENVIRONMENTAL FACTORS

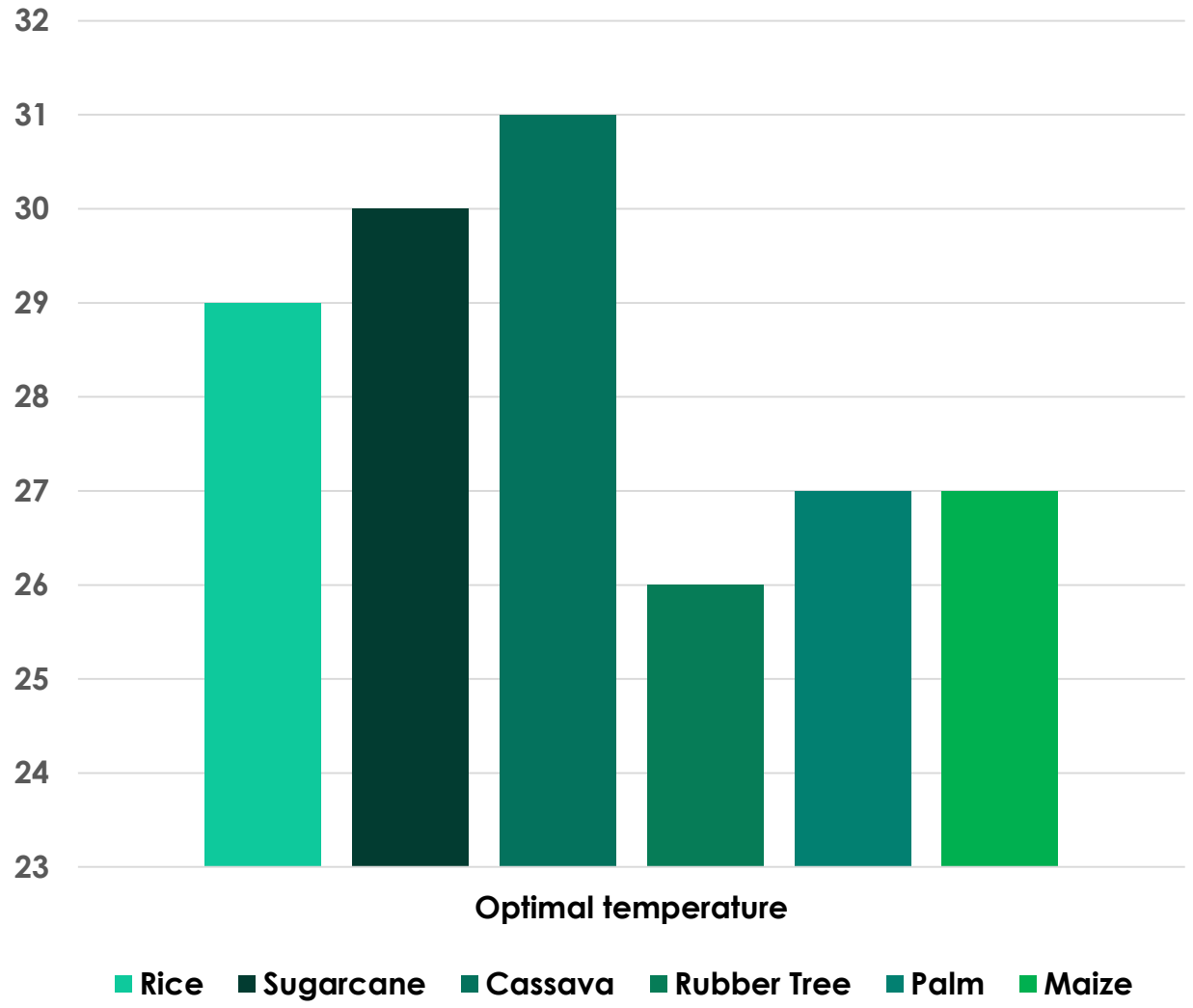

2 *TEMPERATURE*

Thai economic crops have similar range of optimal temperature which varies from 26 – 31 °C and differs from each type. In this case,

Rice: 29 °C
Sugarcane: 30 °C
Cassava: 31 °C
Rubber Tree: 26 °C
Palm: 27 °C
Maize: 27 °C

ENVIRONMENTAL FACTORS

3 *HUMIDITY*

Humidity (Relative Humidity) affects when and how plants open the stomata on their leaves.

4 *ANNUAL RAINFALL*

If annual rainfall is too much or too low, crops will be unable to grow in such situation.

5 *CARBON DIOXIDE INTENSITY*

Carbon dioxide is used in photosynthetic process.

Mechanical Design

Chayanin Uthanpathumros

SPONSORED BY AIRASIA THAILAND

ENCLOSURE & COMPARTMENT

DIMENSION

Diameter : 70 mm
Height : 140 mm

TOTAL WEIGHT

290 grams (including Parachute)

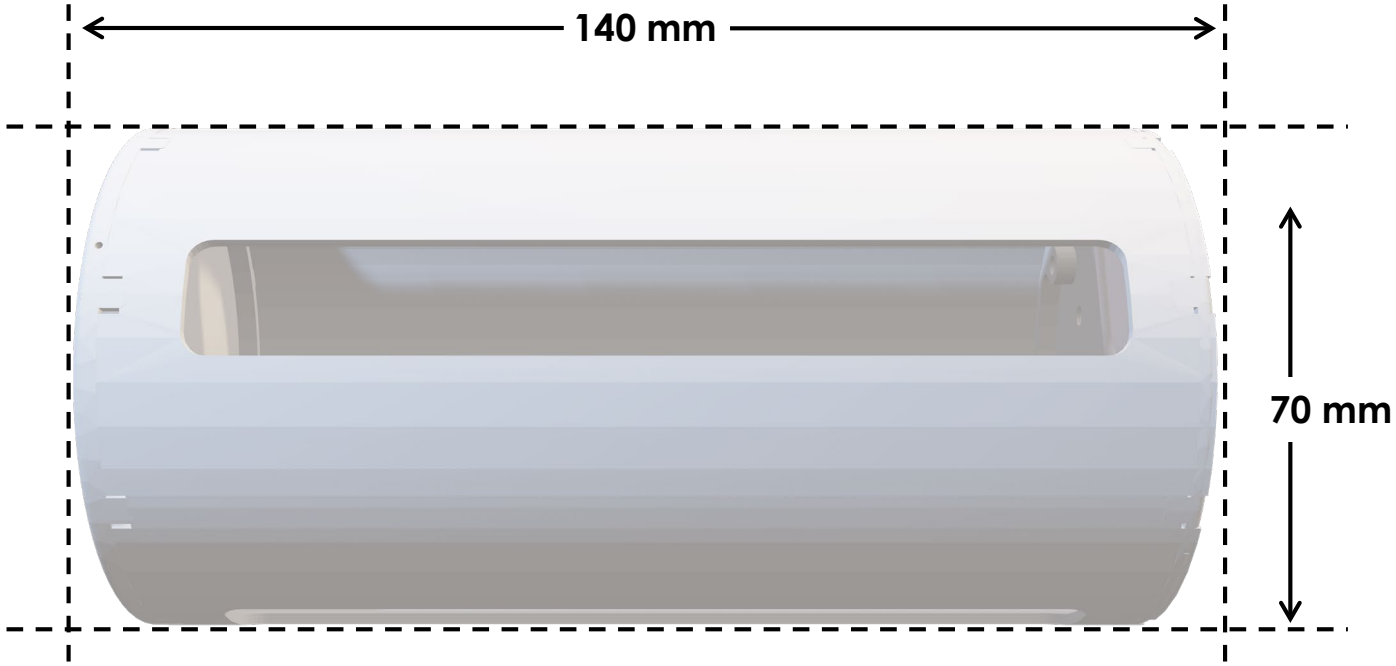

ENCLOSURE & COMPARTMENT

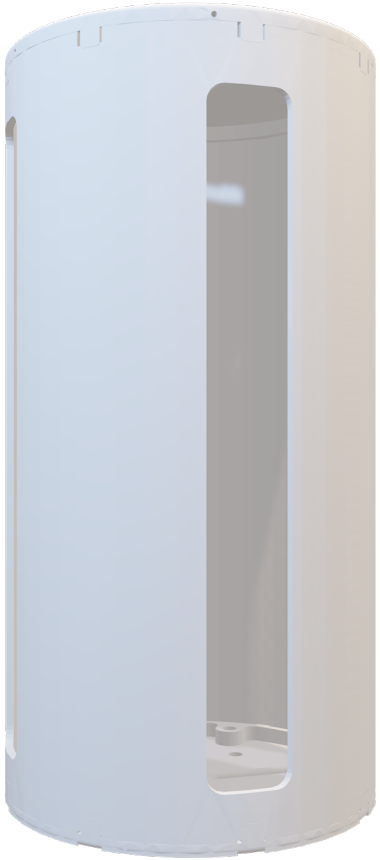

DESIGNS

I) **MATERIAL :** PETG Plastic

II) **COMPARTMENT DESIGN**
- Stacked PCBs
- Cutouts for Aerodynamics & Camera

ENCLOSURE & COMPARTMENT

The descending angle is tilted from perpendicular to the ground to increase aerodynamics of the vehicle.

ENCLOSURE & COMPARTMENT

SPONSORED BY AIRASIA THAILAND

PARACHUTE

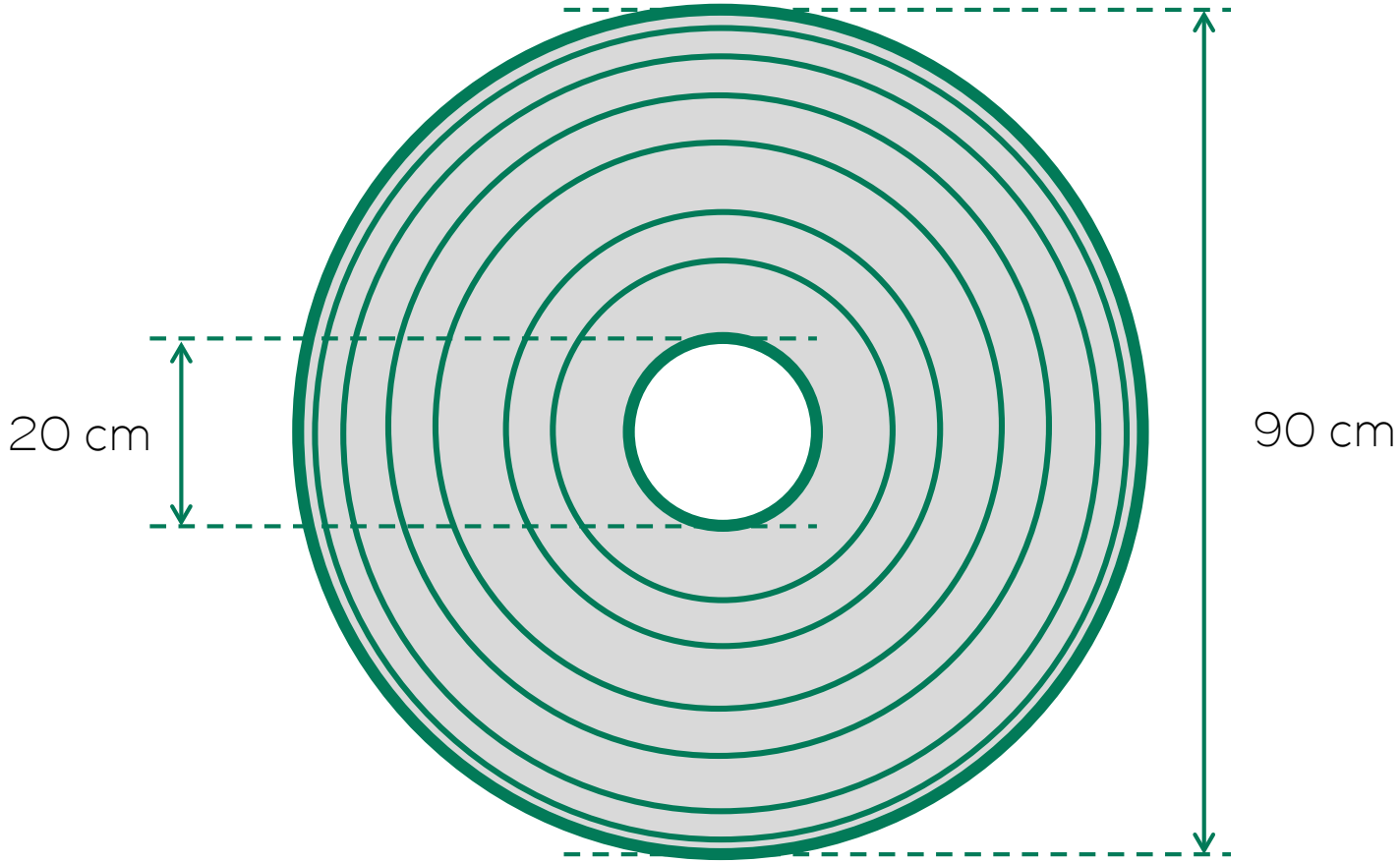

TYPE

Round-type with circular air vent

DIMENSION

Outer Diameter : 90 cm
Inner Diameter : 20 cm

SPONSORED BY AIRASIA THAILAND

Electronics & Circuit Design

Bhavat Ngamdeevilaisak

SPONSORED BY AIRASIA THAILAND

ELECTRONICS & CIRCUIT

Data is gathered from 3 parts:

I | CANSAT & COMMUNICATION

II | GROUND UNIT

III | EXISTING DATABASES

ELECTRONICS & CIRCUIT

Data is gathered from 3 parts:

I | CANSAT & COMMUNICATION

II | GROUND UNIT

III | EXISTING DATABASES

SYSTEM DIAGRAM

SPONSORED BY AIRASIA THAILAND

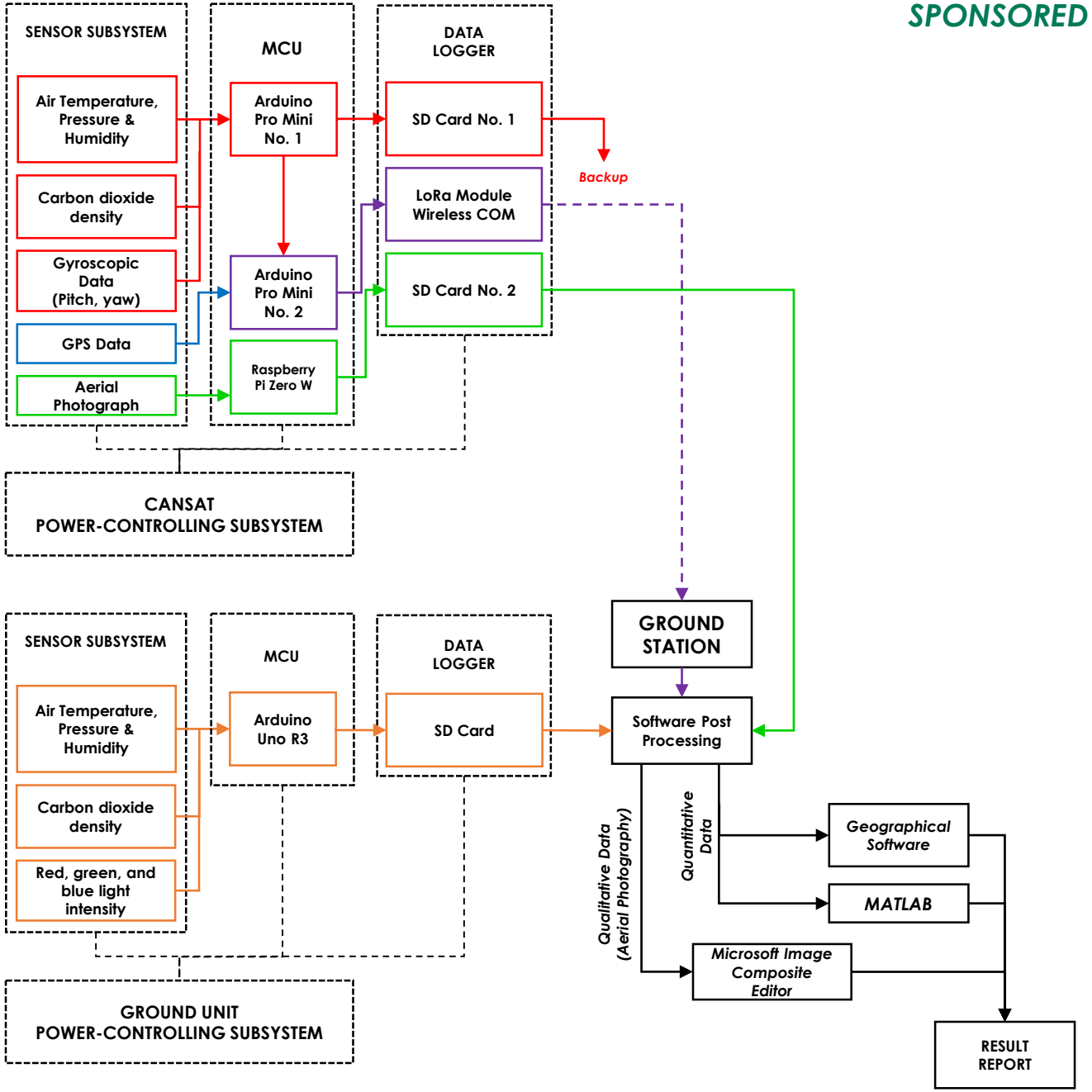

SYSTEM DIAGRAM

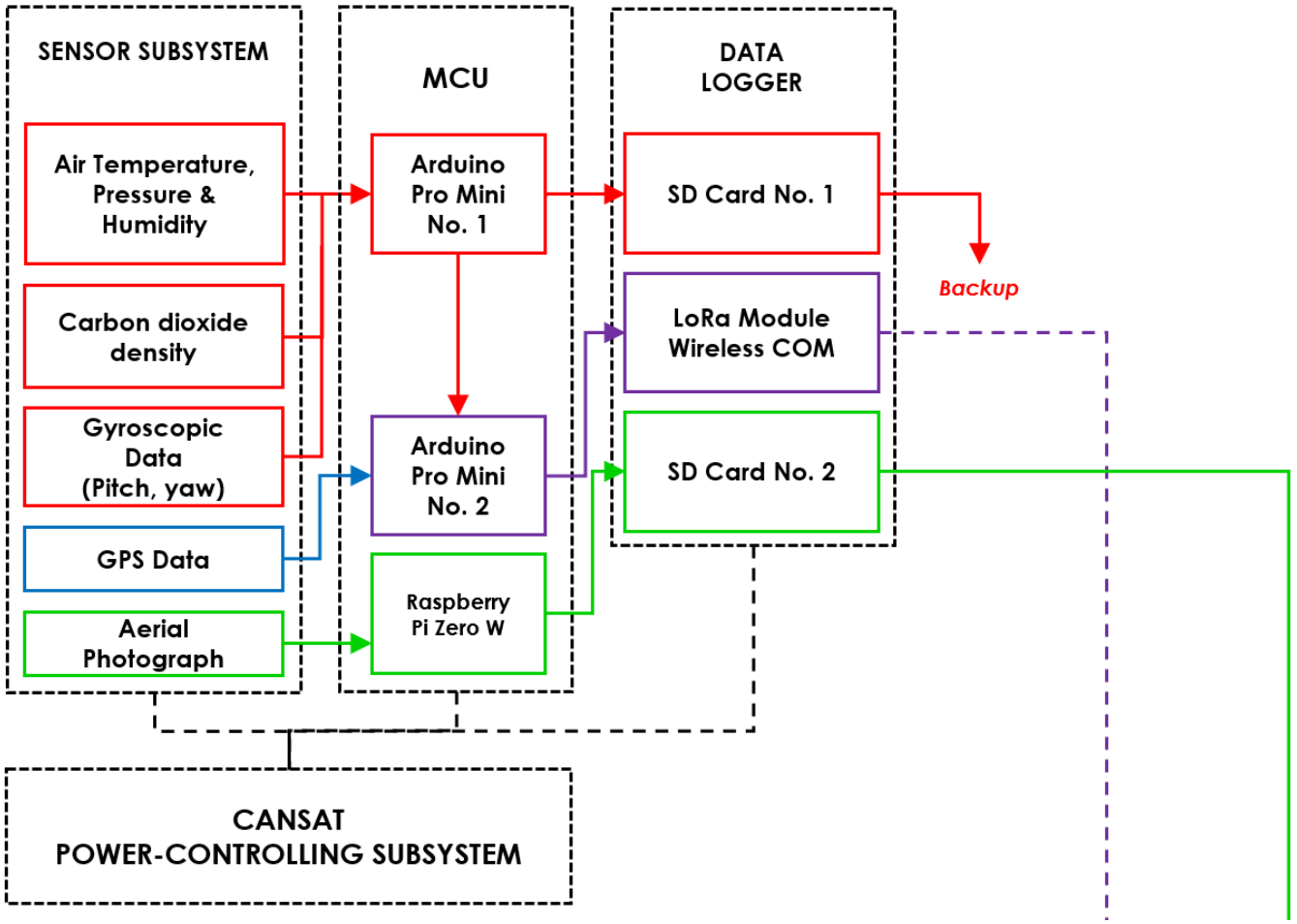

SYSTEM DIAGRAM

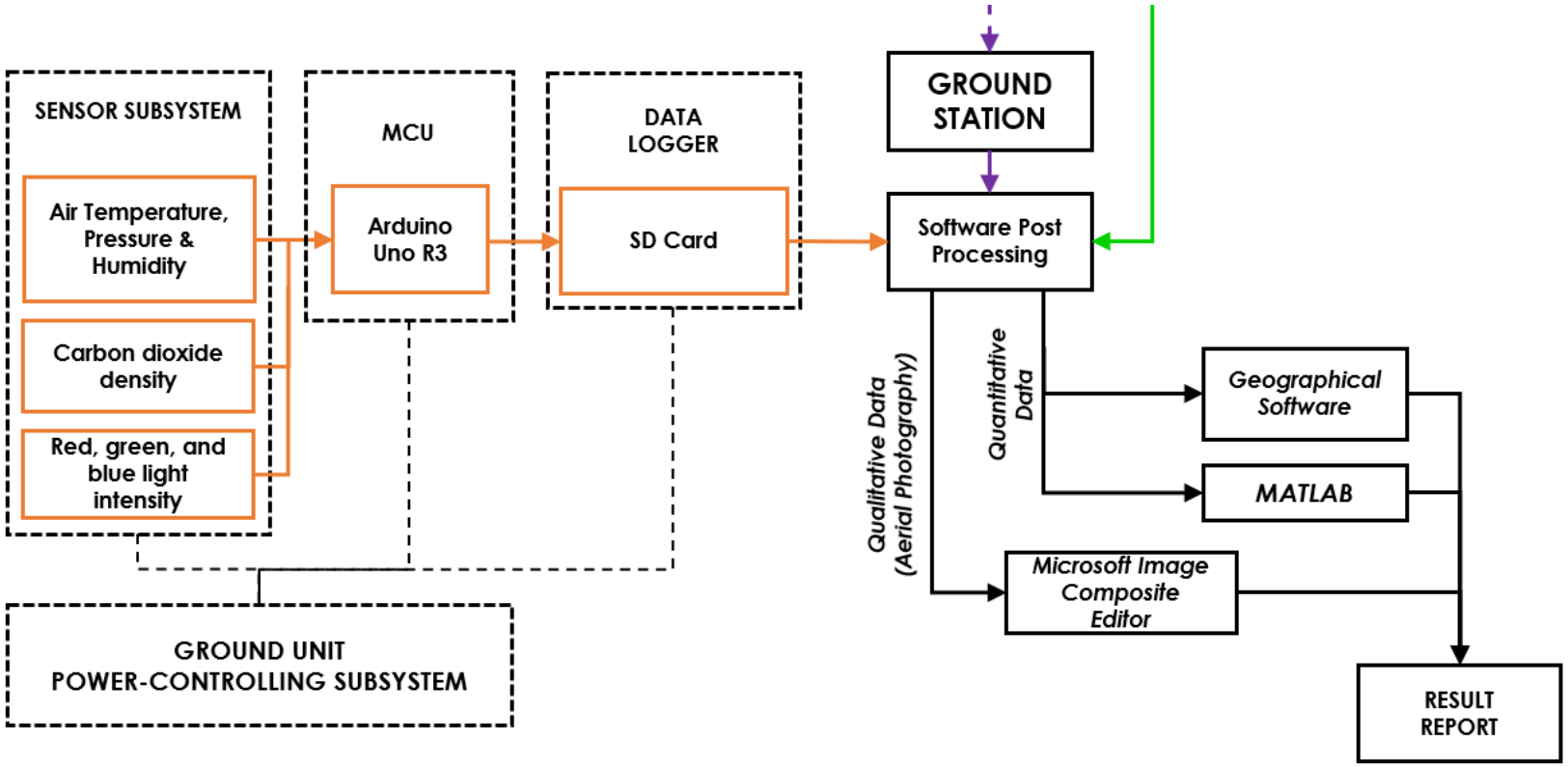

INTEGRATION TEST

1. WIRELESS COM. TEST
2. POWER CONSUMPTION TEST
3. DROP TEST

ELECTRONICS: CANSAT

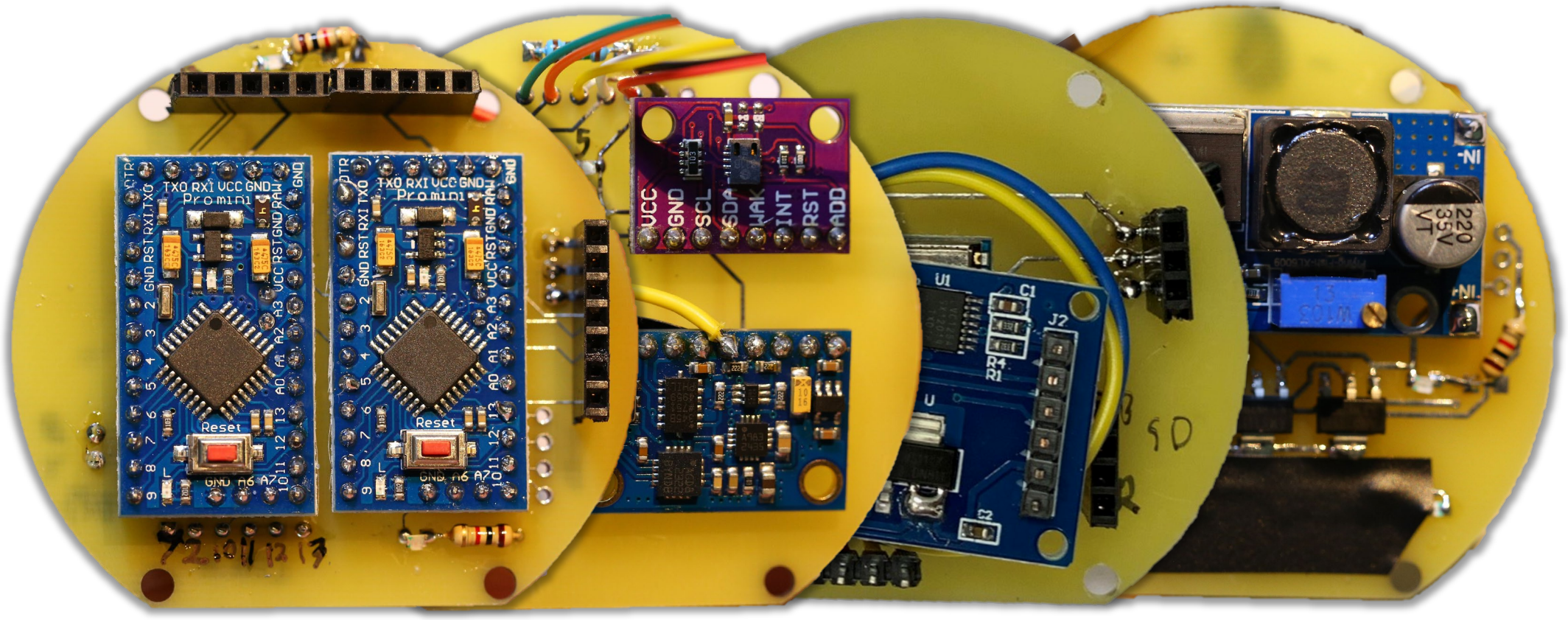

SPONSORED BY AIRASIA THAILAND

ELECTRONICS: CANSAT

SENSORS FLOOR

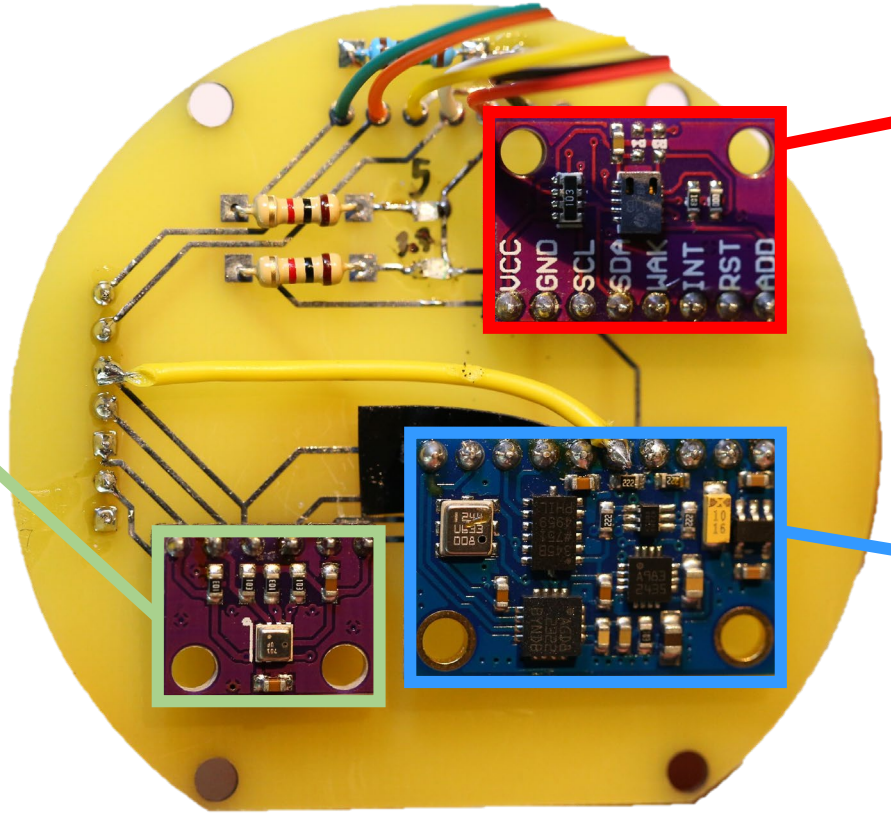

CCS811

BME280

GY-801

SPONSORED BY AIRASIA THAILAND

ELECTRONICS: CANSAT

MAIN CONTROLLER FLOOR

ARDUINO
PRO MINI

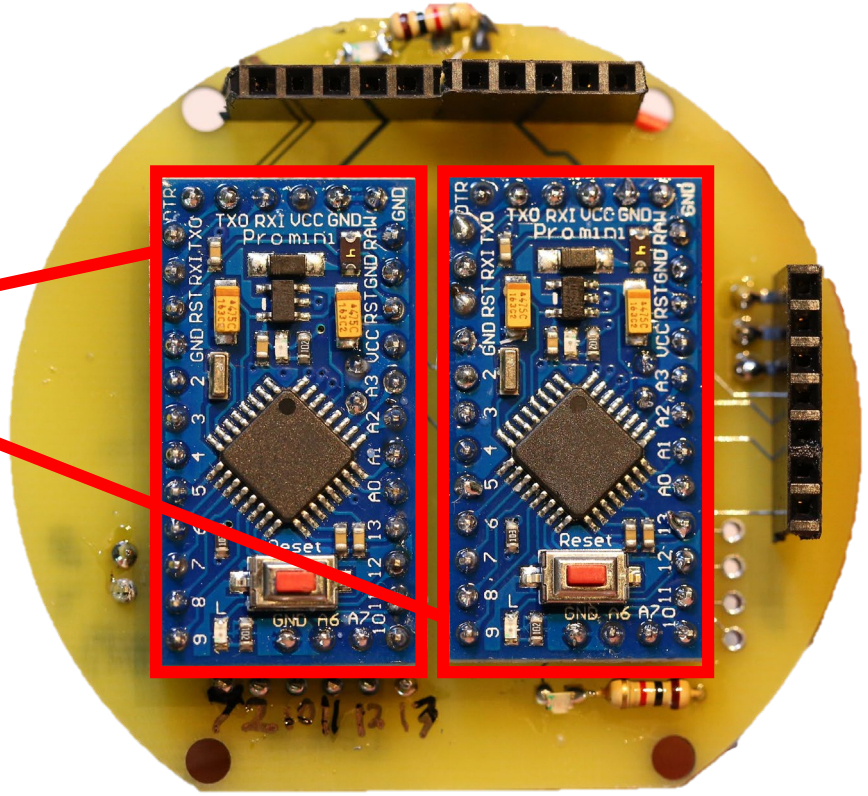

ELECTRONICS: CANSAT

COMMUNICATION FLOOR

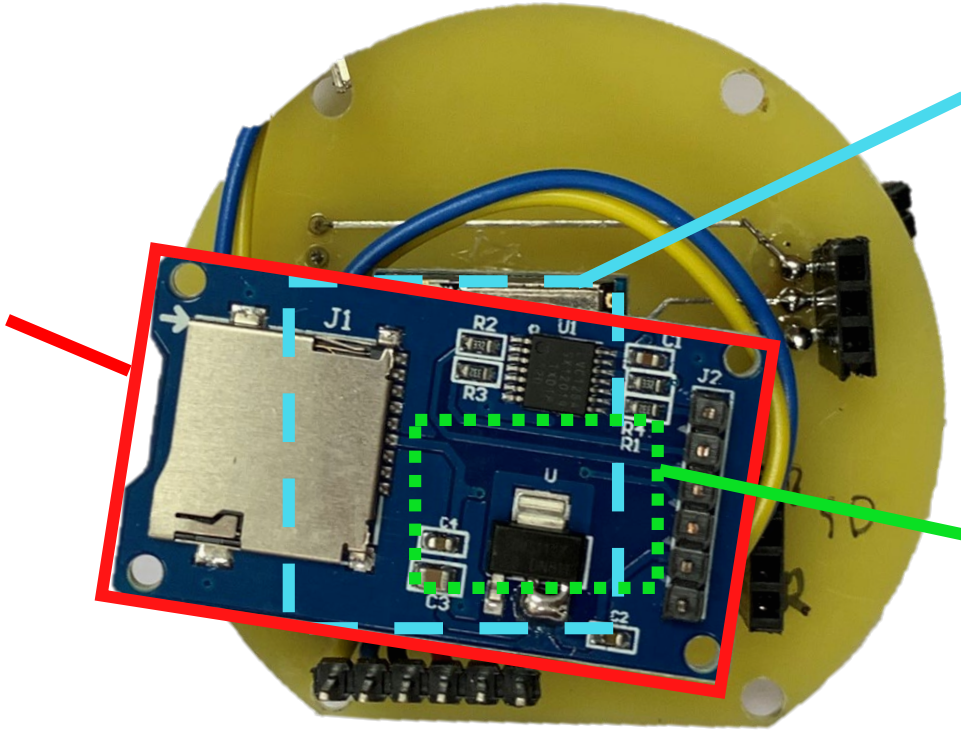

433 MHz
LORA MODULE

SD CARD
READER

GPS MODULE

ELECTRONICS: CANSAT

POWER SUPPLY FLOOR

5V STEP UP MODULE

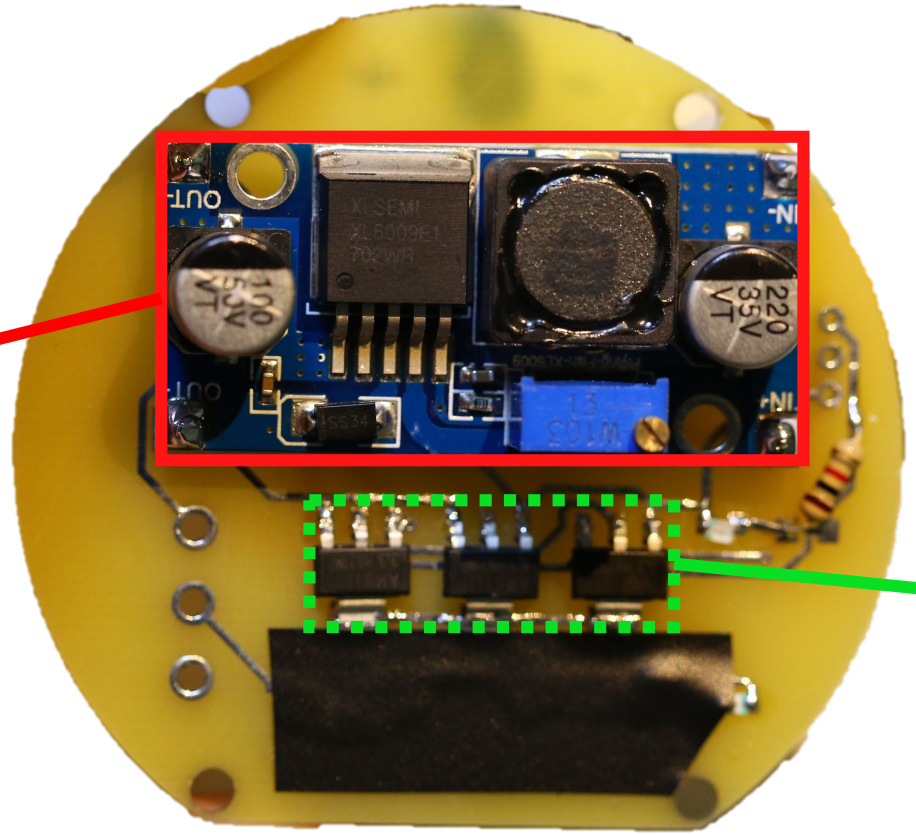

3.3V STEP DOWN REGULATOR

SPONSORED BY AIRASIA THAILAND

ELECTRONICS: CANSAT

CAMERA (RASPBERRY PI)

CAMERA

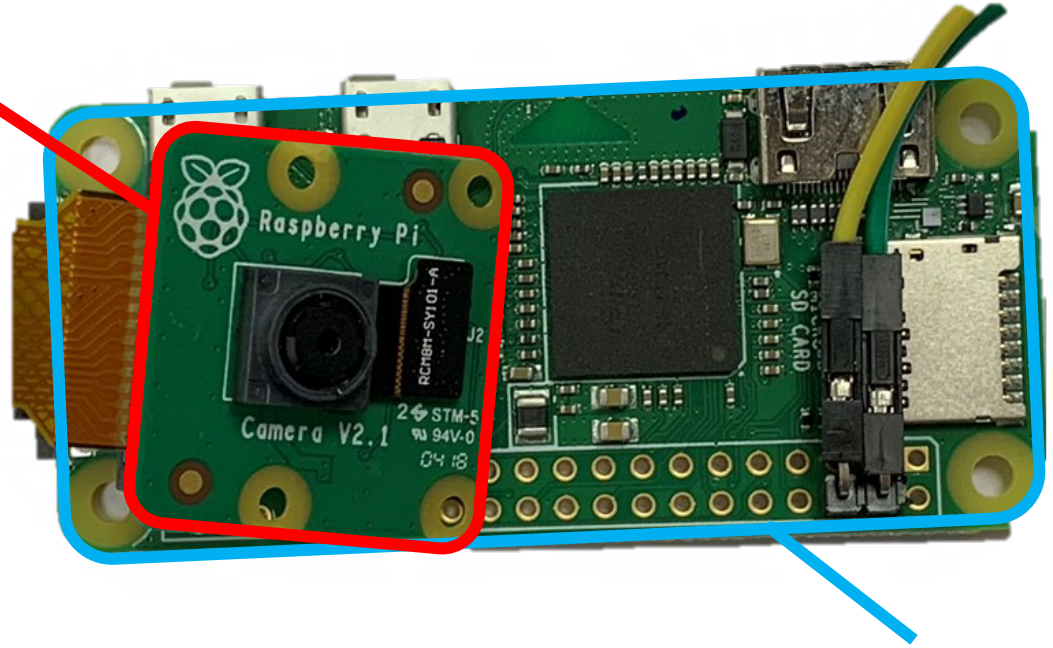

Raspberry Pi Zero W

ELECTRONICS: GROUND UNIT

SPONSORED BY AIRASIA THAILAND

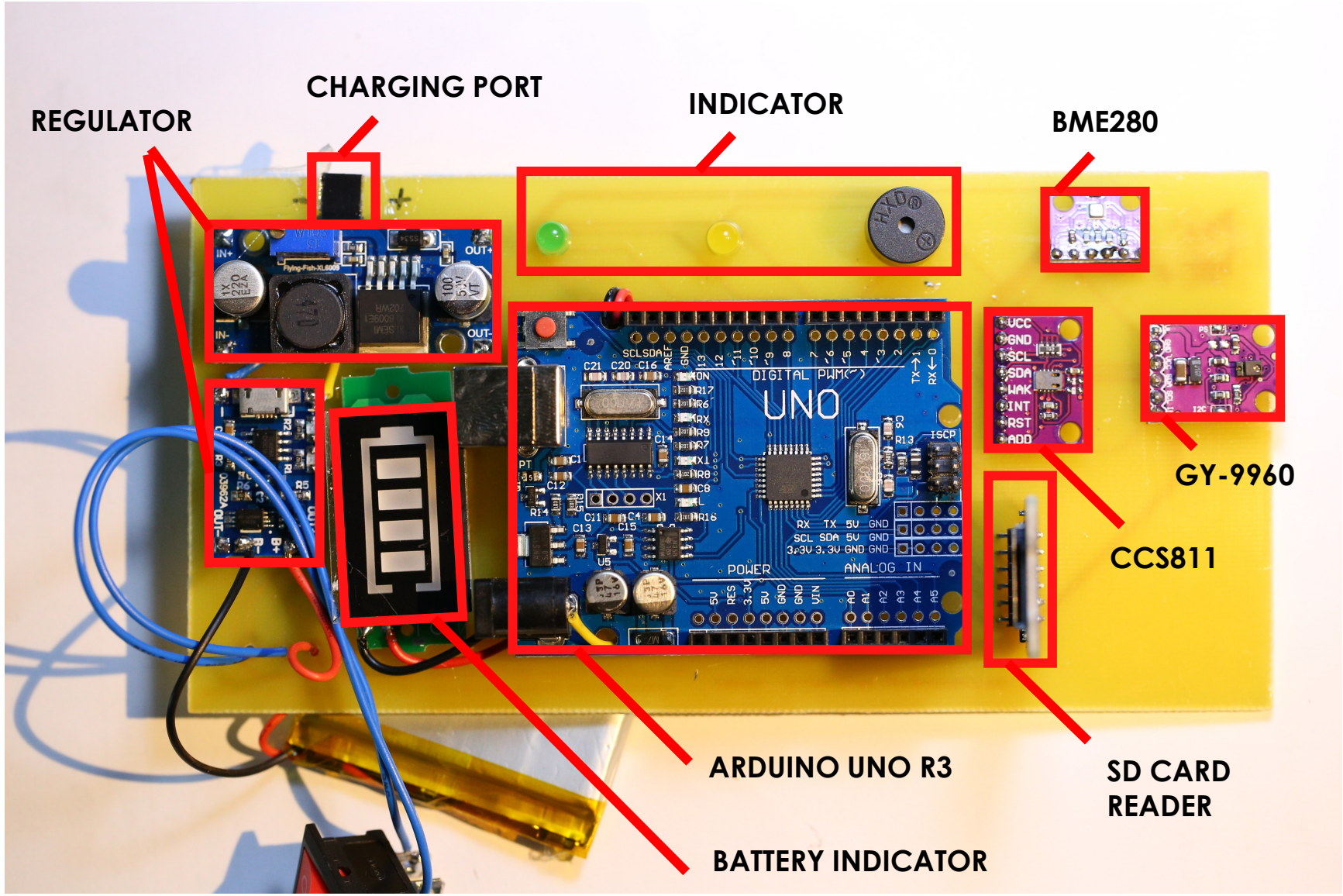

COMMUNICATION SYSTEMS

1 WIRED COM.

I²C	:	**Between Arduino & BME280, CCS811, GY801,** *GY9960 (G.Unit)*
SPI	:	**Between Arduino & SD Card Reader, LoRa SX1278**
Serial	:	**Between Arduino & GPS ATGM336H**

2 WIRELESS COM.

LoRa SX1278 @ 488MHz from CanSat (Sender)
to Ground Station (Receiver)

Data Analysis & Results

Chayakorn Vongbunsin

SPONSORED BY AIRASIA THAILAND

DATA ANALYSIS

1. QUANTITATIVE DATA → MATLAB: USING MEAN OF CORRELATION COEFFICIENT
2. Aerial Photograph → MICROSOFT ICE: COMPOSING CAPTURED IMAGES TO APPROXIMATE THE AREA ACCORDING TO COORDINATES AND CHECK FOR LIVES IN THE AREA
3. Path Coordinates → Pro: DETERMINING THE AREA COVERAGE OF DATA
4. Crop Calendar

SPONSORED BY AIRASIA THAILAND

DATA RESULTS

Suitability of each economic crop in each factor Table

Suitability of factors	I	II	III	IV	V	VI
Temperature (%)	11.78	43.72	9.41	10.56	26.90	38.02
Humidity (%)	39.68	79.16	16.28	46.02	8.72	13.30
CO_2 intensity (%)	56.80	56.80	56.80	56.80	56.80	56.80
Annual rainfall (%)	37.77	67.91	25.60	40.00	10.62	79.42
Red light (%)	79.61	79.61	79.61	79.61	79.61	79.61
Blue light (%)	79.61	79.61	79.61	79.61	79.61	79.61
Overall (%)	50.88	67.80	44.55	52.10	43.71	57.79

SPONSORED BY AIRASIA THAILAND

RESULT

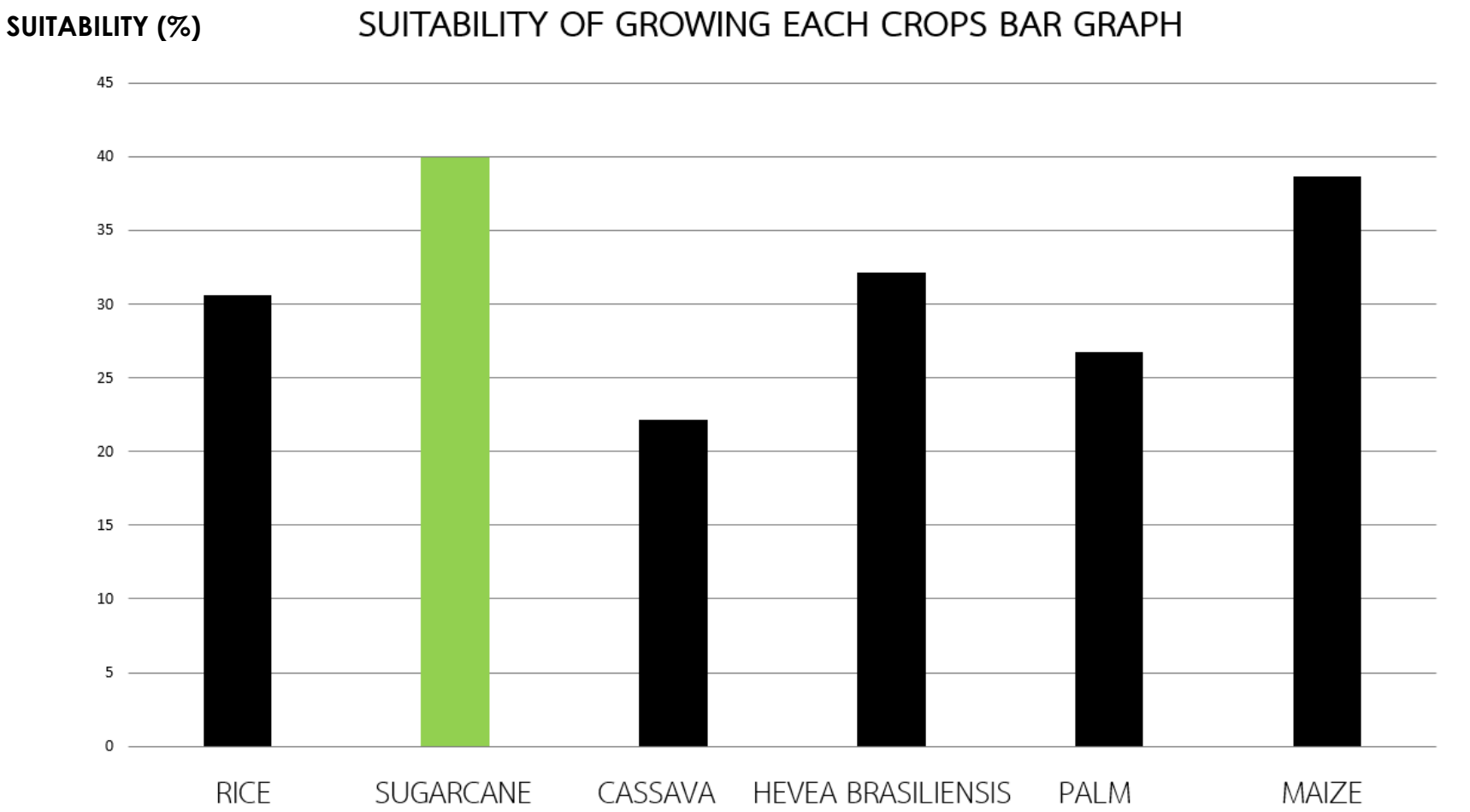

SPONSORED BY AIRASIA THAILAND

RESULT : SUITABILITY MAP

Suitability Map

Moderately suitable
Highly suitable

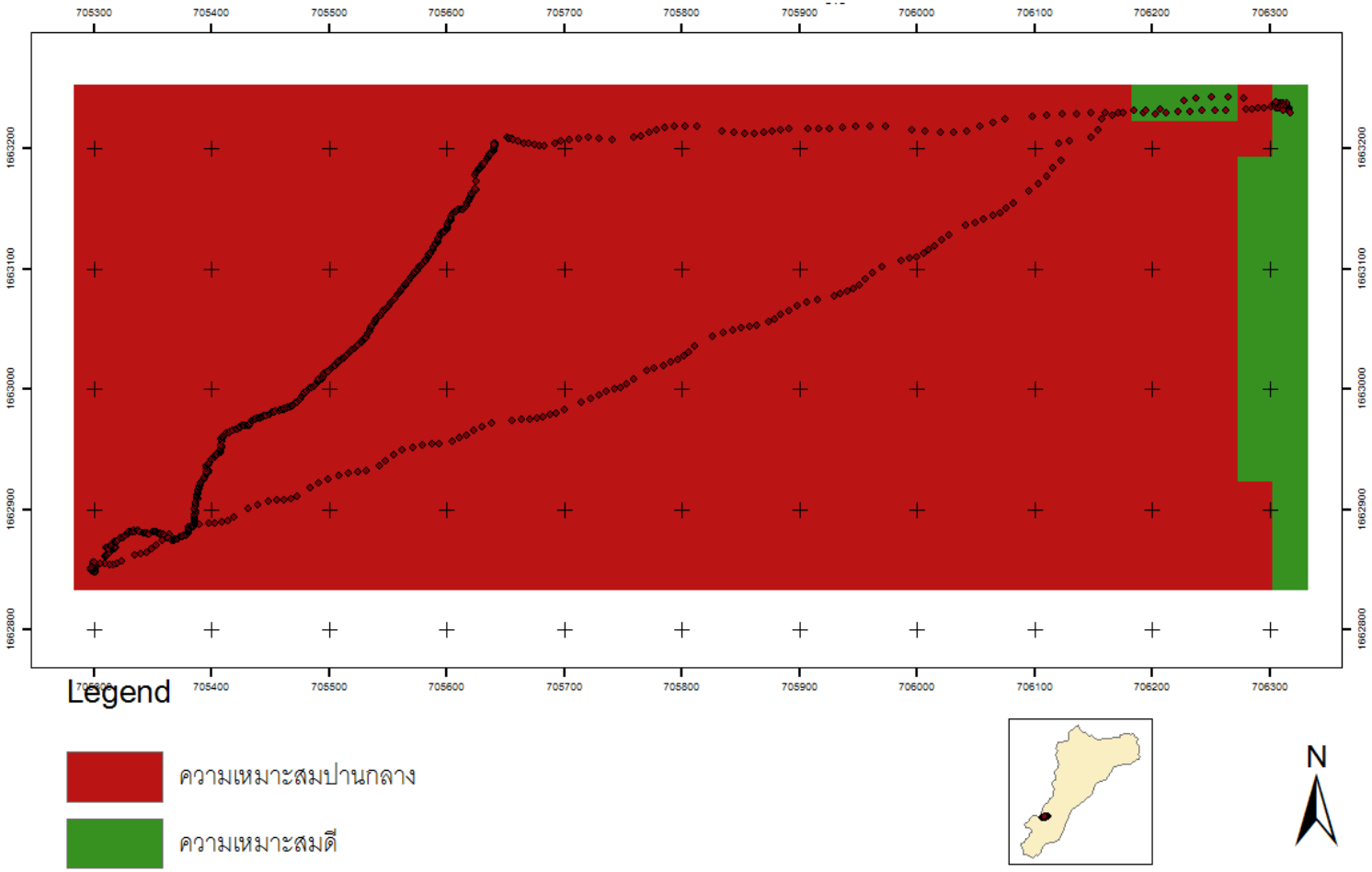

SPONSORED BY AIRASIA THAILAND

RESULT : AERIAL IMAGERY

SPONSORED BY AIRASIA THAILAND

CONCLUSION

Benefits: - Advise agriculturists and farmers to grow the most suitable crop

Future Developments:
- More Compact Design
- More Advanced Flight Mechanism
- Accuracy & Precision of Data Analysis
- Less Programming Interfaces & Controller

Competition Prizes:
- The First Place Award
- The Best Presentation Award

Q&A